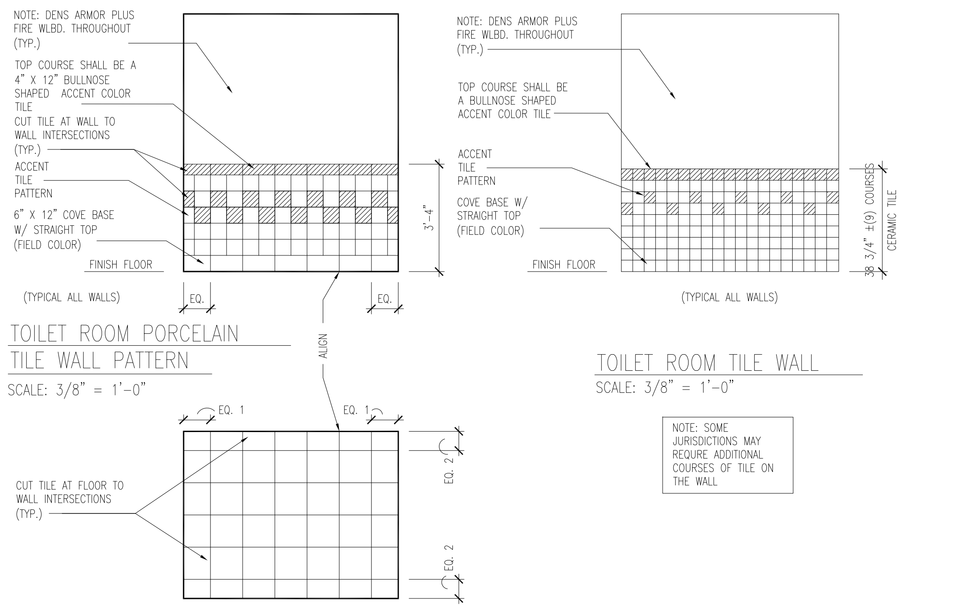

20 TILE PATTERNS
SCALE 1/4" = 1'-0"

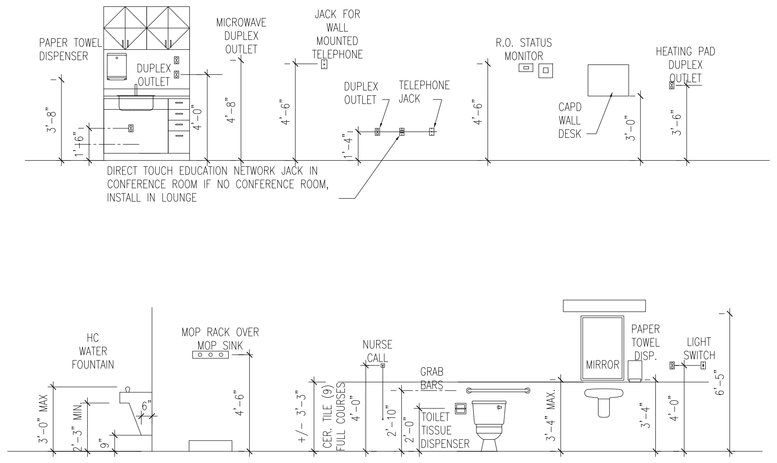

19 TYPICAL MOUNTING HEIGHTS
SCALE 1/4" = 1'-0"

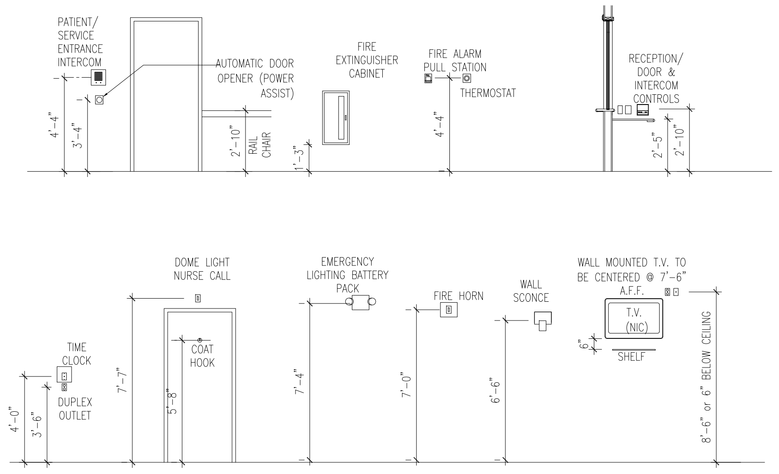

18 TYPICAL MOUNTING HEIGHTS
SCALE 1/4" = 1'-0"

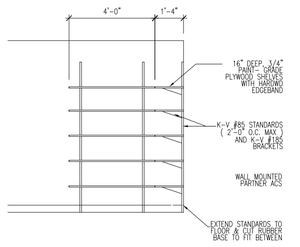

17 STORAGE
SCALE 1/4" = 1'-0"

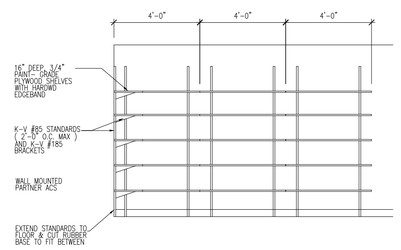

16 STORAGE
SCALE 1/4" = 1'-0"

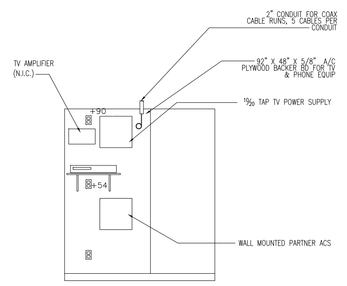

15 STORAGE
SCALE 1/4" = 1'-0"

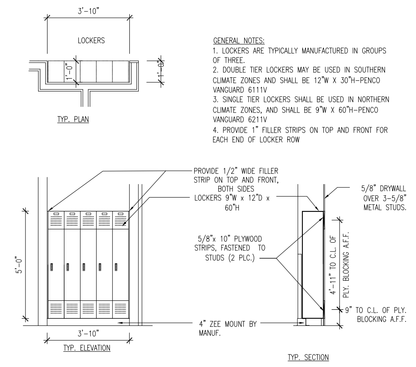

14 LOCKERS
SCALE 1/4" = 1'-0"

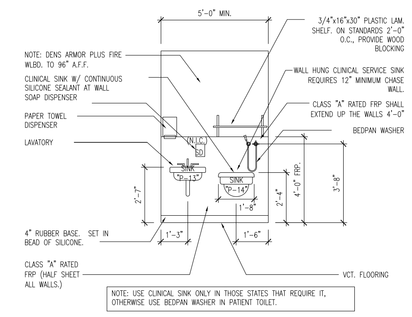

13 SOILED UTILITY
SCALE 1/4" = 1'-0"

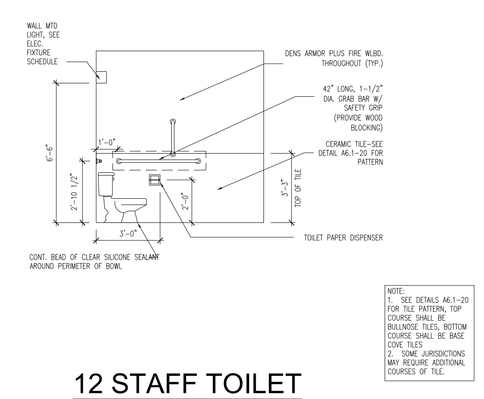

12 STAFF TOILET
SCALE 1/4" = 1'-0"

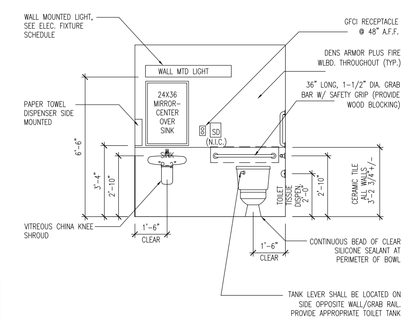

11 STAFF TOILET
SCALE 1/4" = 1'-0"

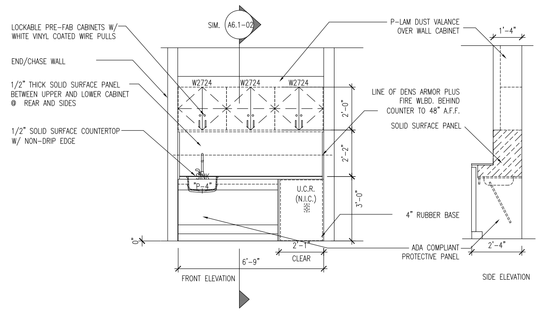

10 MED PREP
SCALE 1/4" = 1'-0"

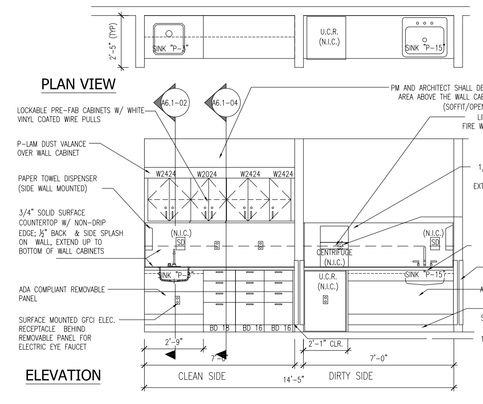

09 LAB PREP
SCALE 1/4" = 1'-0"

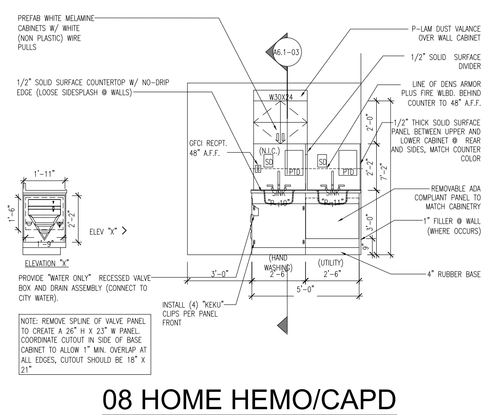

08 HOME HEMO/CAPD
SCALE 1/4" = 1'-0"

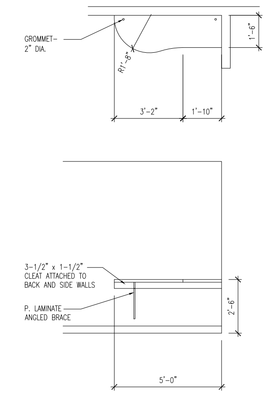

07C CAPD
SCALE 1/4" = 1'-0"

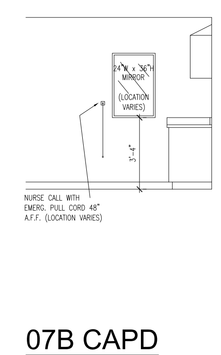

07B CAPD
SCALE 1/4" = 1'-0"

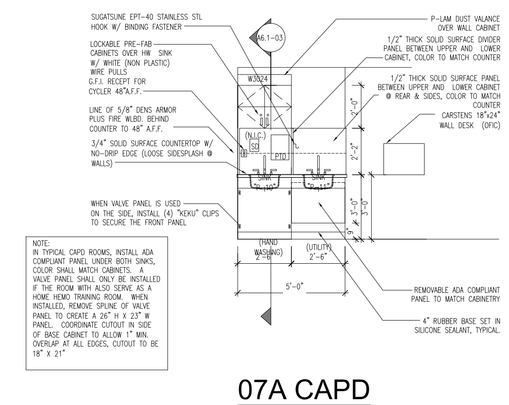

07A CAPD
SCALE 1/4" = 1'-0"

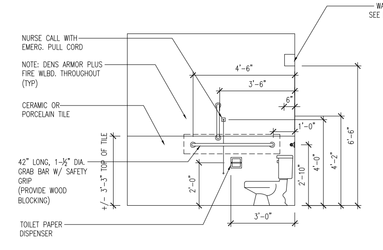

06 PATIENT TOILET
SCALE 1/4" = 1'-0"

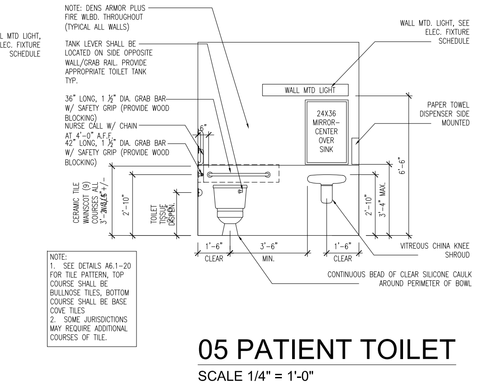

05 PATIENT TOILET
SCALE 1/4" = 1'-0"

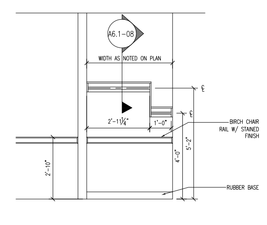

04 WAITING
SCALE 1/4" = 1'-0"

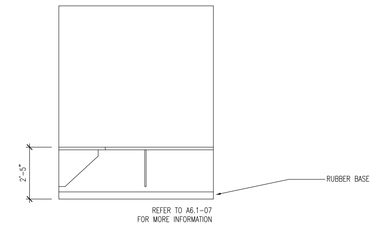

03 RECEPTION
SCALE 1/4" = 1'-0"

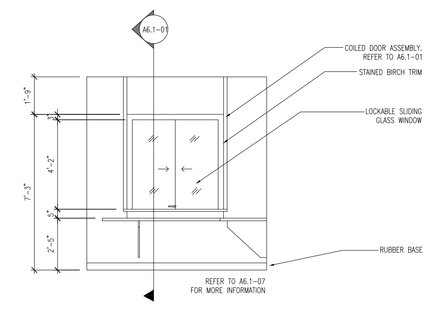

02 RECEPTION
SCALE 1/4" = 1'-0"

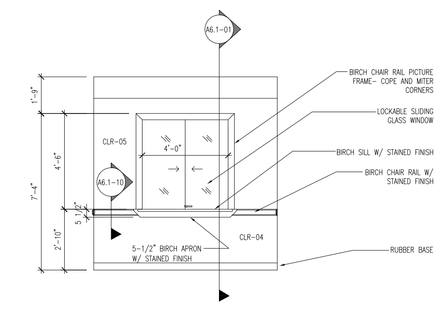

01 WAITING
SCALE 1/4" = 1'-0"

INTERIOR ELEVATIONS
SCALE: 1/4" = 1'-0"

WILLIAM H. COOLER REGISTERED No. AR10000327 STATE OF INDIANA ARCHITECT
COOLER DESIGN, Inc.
Healthcare & Commercial Architecture, Planning & Interior Design
9101 N. Meridian Street Suite 145 Indianapolis, Indiana 46260
317.816.1144 PH 317.573.8301 FX www.coolerdesign.com

Proposed Dialysis Clinic for:
NOBLESVILLE EXPANSION
165 Sheridan Road
Noblesville, IN 46060

This is the place where a disclaimer statement can be placed.

Drafted By:	BAS
Checked By:	WHC
Date Drawn:	07/20/10
Project #:	028012

REV #	DATE	REVISION DESCRIPTION
1	X/XX/XX	XXXXXXXXXXXXXXXXXX

A6.0